Version 1.1

Surname		Other Names	
Centre Number		Candidate Number	
Candidate Signature			

Leave blank

General Certificate of Secondary Education
June 2003

ASSESSMENT and QUALIFICATIONS ALLIANCE

MATHEMATICS (MODULAR) (SPECIFICATION B) 33005/I1
Module 5 Intermediate Tier
Paper 1 Non-Calculator

Wednesday 4 June 2003 1.30 pm to 2.45 pm

In addition to this paper you will require:
mathematical instruments.
You must **not** use a calculator.

Time allowed: 1 hour 15 minutes

Instructions
- Use blue or black ink or ball-point pen. Draw diagrams in pencil.
- Fill in the boxes at the top of this page.
- Answer **all** questions in the spaces provided.
- Do all rough work in this booklet.

Information
- The maximum mark for this paper is 70.
- Mark allocations are shown in brackets.
- Additional answer paper, graph paper and tracing paper will be issued on request and must be tagged securely to this answer booklet.

Advice
- In all calculations, show clearly how you work out your answer.

For Examiner's Use	
Pages	Mark
3	
4 – 5	
6 – 7	
8 – 9	
10 – 11	
12 – 13	
14 – 15	
16 – 17	
18	
TOTAL	
Examiner's Initials	

Copyright © 2003 AQA and its licensors. All rights reserved.

Formulae Sheet: Intermediate Tier

You may need to use the following formulae:

Area of trapezium = $\frac{1}{2}(a+b)h$

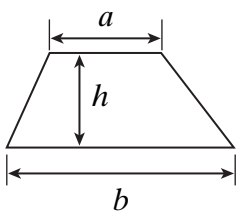

Volume of prism = area of cross section × length

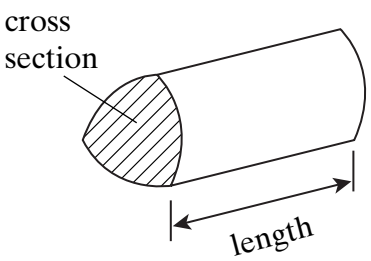

LEAVE MARGIN BLANK

Answer **all** questions in the spaces provided.

1 Work out the value of

(a) 5^3

.....

Answer ..... *(1 mark)*

(b) 10^4

.....

Answer ..... *(1 mark)*

2 (a) Simplify $2p + 3q - p - 4q$

.....

Answer ..... *(2 marks)*

(b) Find the value of $3x + 4y$ when $x = 6$ and $y = -3$

.....

.....

Answer ..... *(2 marks)*

TURN OVER FOR THE NEXT QUESTION

6

LEAVE MARGIN BLANK

3 A conversion graph is shown.

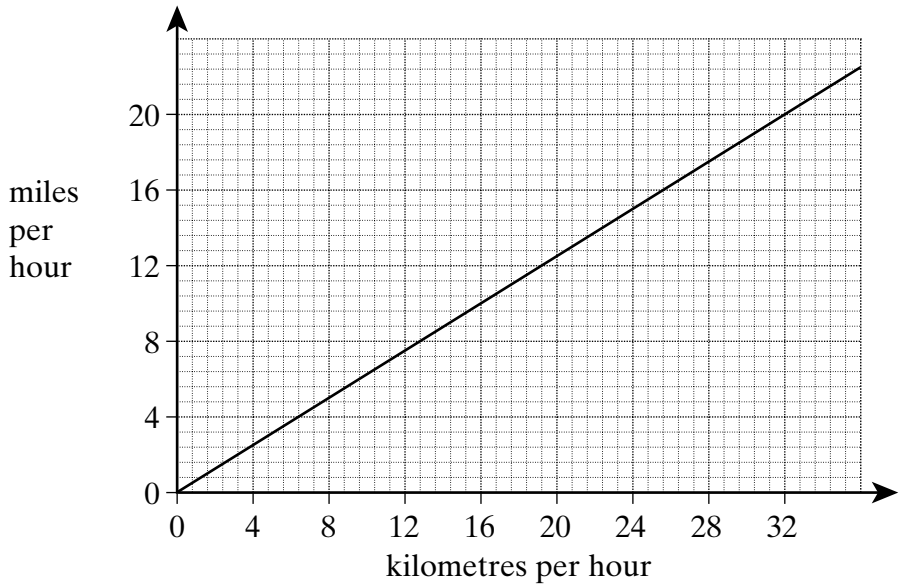

Use the graph to convert 96 kilometres per hour into miles per hour.

.....

.....

Answer ..... miles per hour *(3 marks)*

LEAVE MARGIN BLANK

4 The length of a rectangle is twice its width.

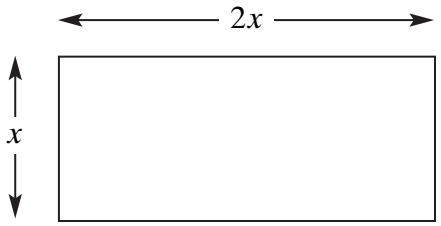

Not to scale

The area of the rectangle is $50\,\text{cm}^2$.

(a) Show that the length of the rectangle is 10 cm.

.....

.....

(1 mark)

(b) Work out the perimeter of the rectangle.

.....

.....

Answer ..... cm *(1 mark)*

TURN OVER FOR THE NEXT QUESTION

LEAVE MARGIN BLANK

5 The diagram shows the positions of A and B.
The diagram is drawn to scale.
1 cm represents 10 km.

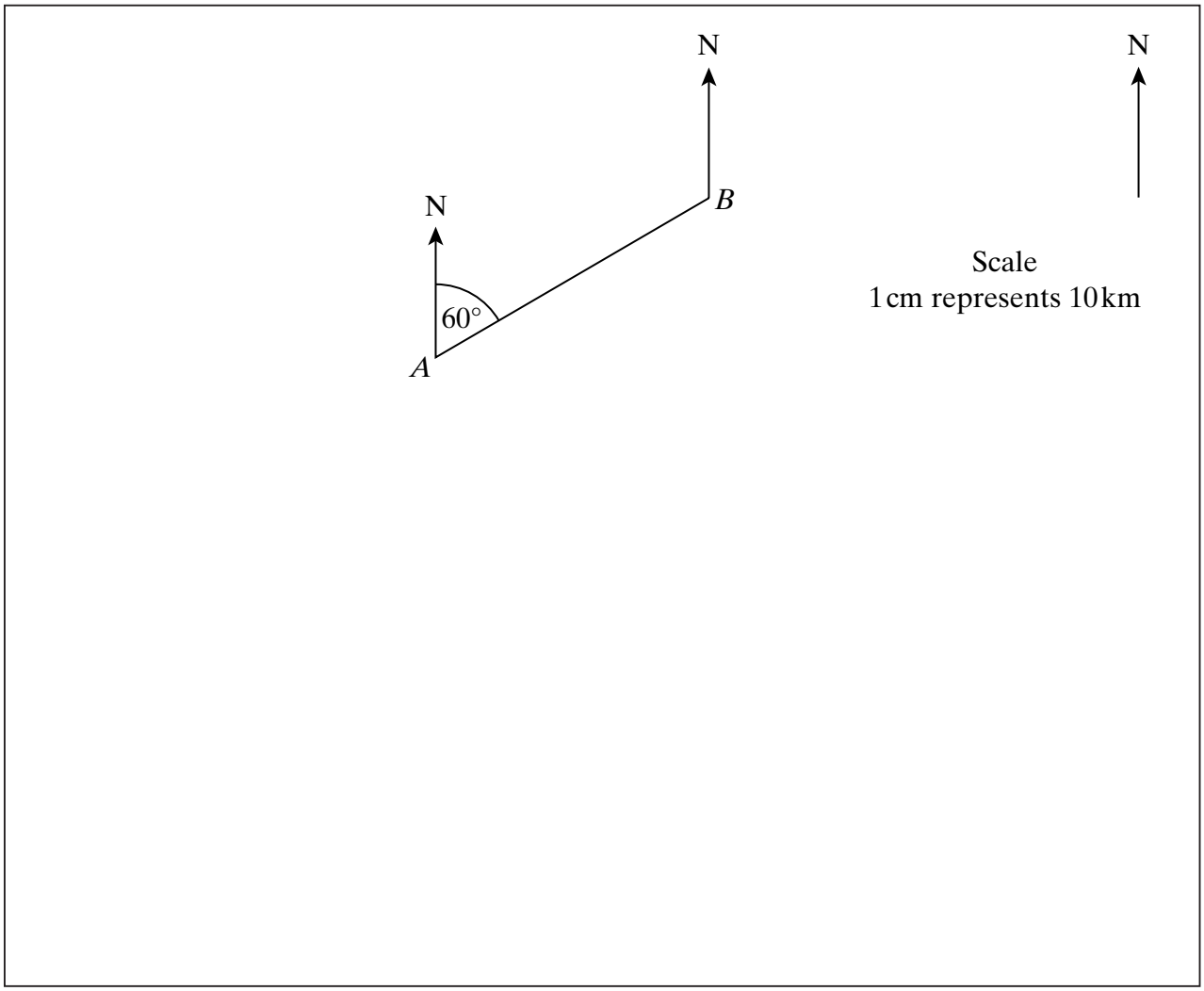

(a) Use the diagram to calculate the actual distance of B from A.

.....

.....

Answer ..... km *(2 marks)*

(b) C is due south of B.

(i) Write down the three figure bearing of C from B.

Answer ..... ° *(1 mark)*

(ii) C is also on a bearing of 150° from A.

Mark the position of C on the diagram. *(2 marks)*

LEAVE MARGIN BLANK

6 (a) The diagram shows a hexagon.
The hexagon has two lines of symmetry as shown.

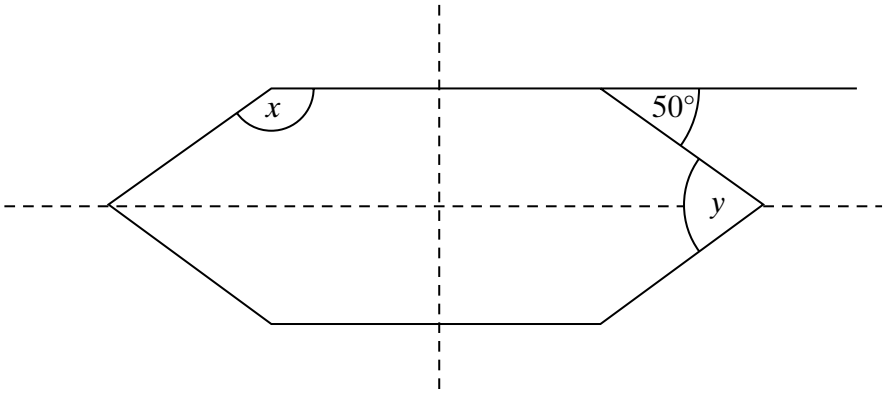

Not drawn accurately

(i) Work out the value of x.

.....

Answer ..... degrees *(1 mark)*

(ii) Work out the value of y.

.....

Answer ..... degrees *(2 marks)*

(b) The diagram shows a hexagonal prism.

The area of the hexagon is $12\,\text{cm}^2$.
The height of the prism is $5\,\text{cm}$.

Not to scale

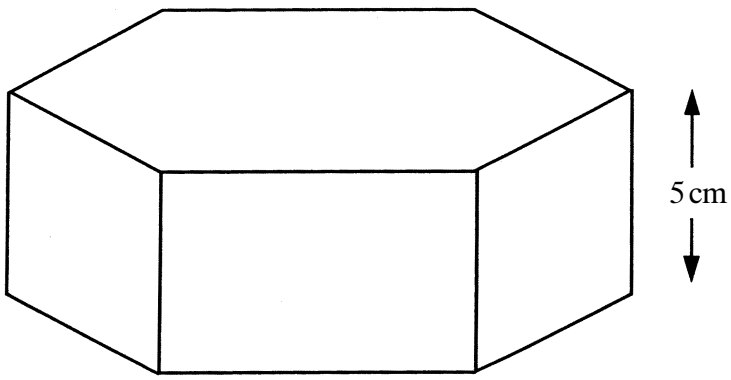

Calculate the volume of the prism.

.....

.....

Answer ..... *(3 marks)*

11

Turn over ▶

LEAVE MARGIN BLANK

7 (a) p is an odd number.

Is $2p + 1$ an odd number, an even number or could it be either?
Tick the correct box.

☐ odd ☐ even ☐ either

(1 mark)

(b) The nth term of a sequence is $4n + 1$

(i) Write down the first **three** terms of the sequence.

.....

.....

Answer ..... *(2 marks)*

(ii) Is 122 a term in this sequence?
You **must** explain your answer.

.....

.....

.....

(1 mark)

8 In a test Adam scored 10 more marks than Rachael.
Altogether they scored 62 marks.

Find Adam's score.

.....

.....

.....

.....

.....

.....

Answer ..... marks *(3 marks)*

LEAVE MARGIN BLANK

9 The diagram represents a solid made from 9 small cubes.

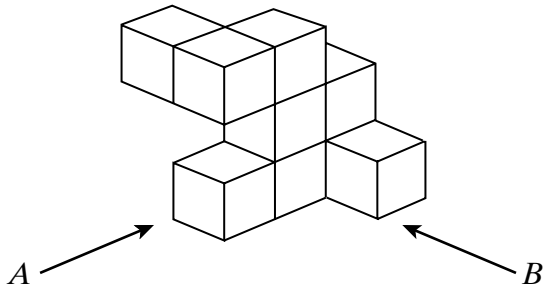

The view of the solid from direction *A* is shown below.

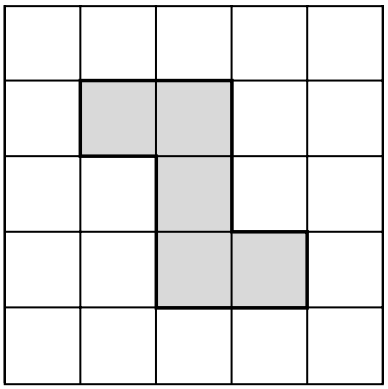

On the grid below, draw the view of the solid from direction *B*.

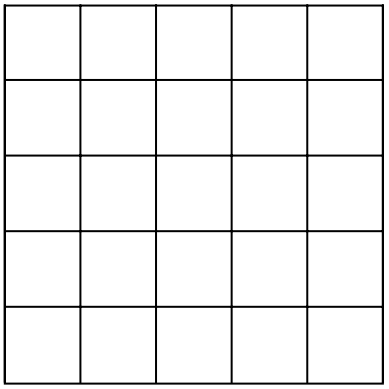

(2 marks)

9

Turn over ▶

LEAVE MARGIN BLANK

10 (a) The diagram shows two identical shapes A and B.

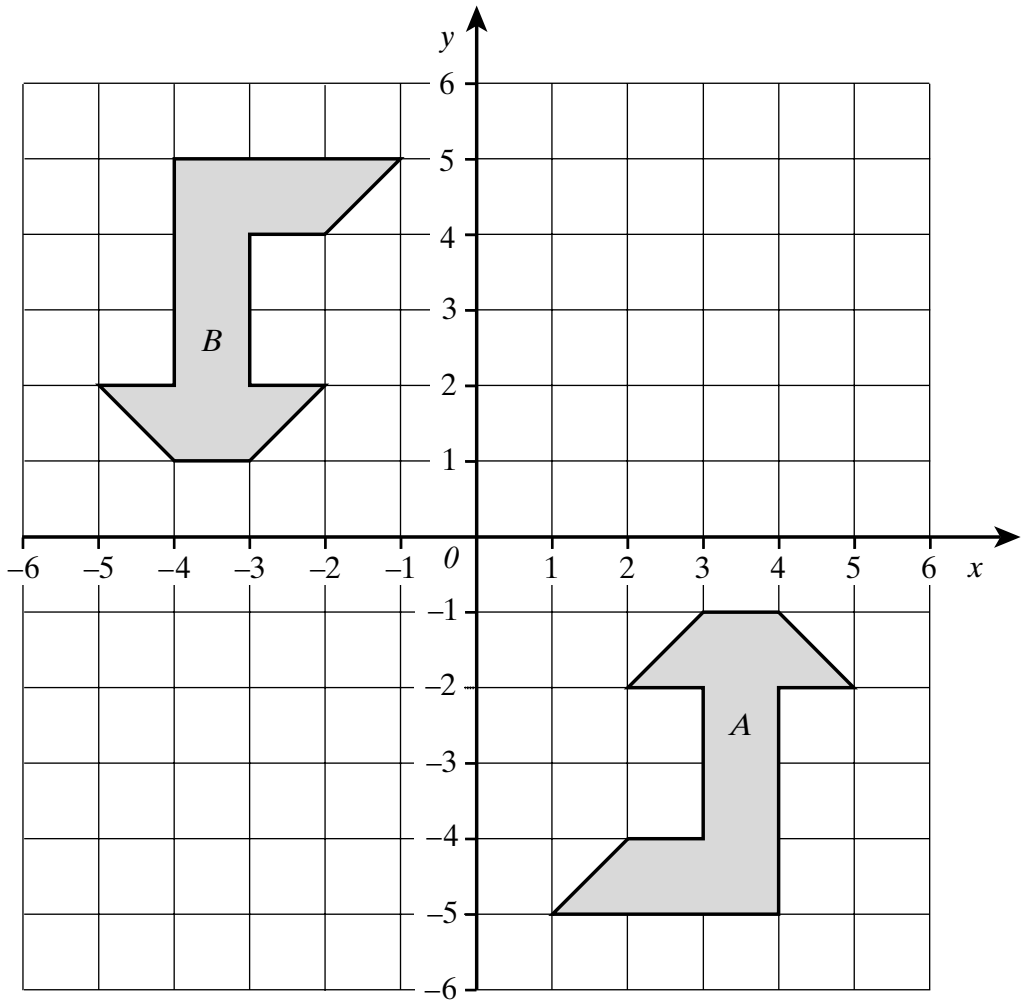

Describe fully the **single** transformation which takes shape A to shape B.

.....

.....

(3 marks)

LEAVE MARGIN BLANK

(b) The diagram shows two triangles, C and D.

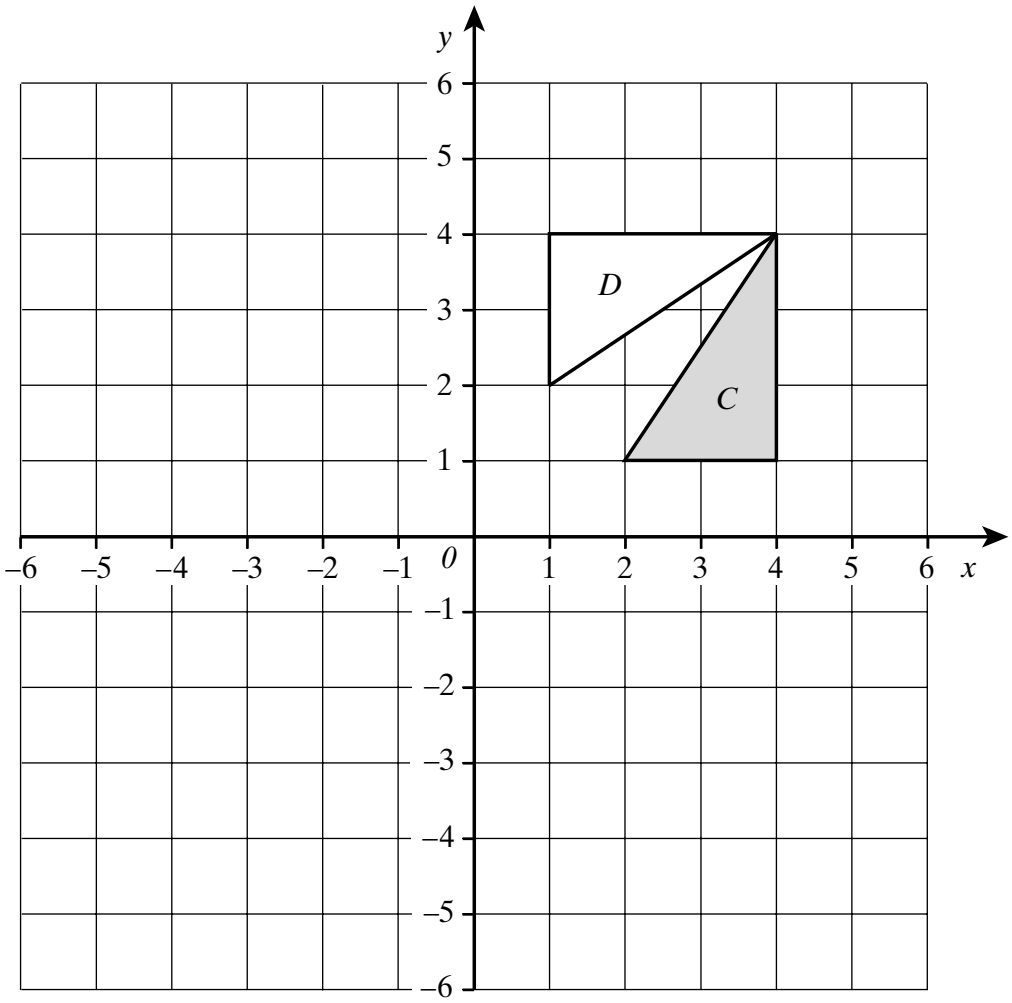

(i) Translate the shaded triangle C by the vector $\begin{pmatrix} -4 \\ -3 \end{pmatrix}$

Label the new triangle E. *(2 marks)*

(ii) Describe fully the **single** transformation which maps triangle C to triangle D.

.....

.....

(2 marks)

7

Turn over ▶

LEAVE MARGIN BLANK

11 The diagram shows a regular decagon.

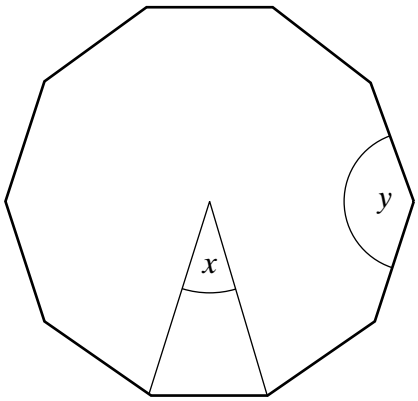

Not drawn accurately

(a) Work out the angle at the centre of the decagon, marked x on the diagram.

.....

.....

Answer ..... degrees *(2 marks)*

(b) Work out the size of the interior angle, marked y on the diagram.

.....

.....

Answer ..... degrees *(2 marks)*

LEAVE MARGIN BLANK

12 Tom builds fencing from pieces of wood as shown below.

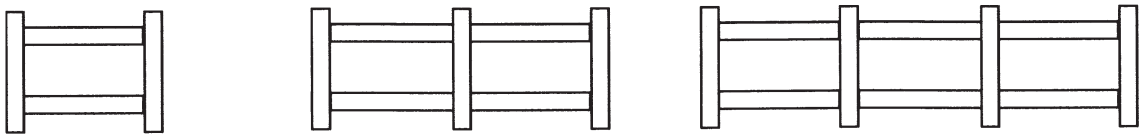

Diagram 1
4 pieces of wood

Diagram 2
7 pieces of wood

Diagram 3
10 pieces of wood

How many pieces of wood will be in Diagram n?

.....

.....

.....

Answer ..... *(2 marks)*

13 Expand and simplify

$$5(2x + 1) - 3(x - 4)$$

.....

.....

Answer ..... *(2 marks)*

8

Turn over ▶

LEAVE MARGIN BLANK

14 (a) Complete the table of values for $y = x^2 - 4x - 1$.

x	–1	0	1	2	3	4	5
y		–1	–4		–4	–1	4

.....

.....

(2 marks)

(b) On the grid, draw the graph of $y = x^2 - 4x - 1$ for values of x from -1 to $+5$.

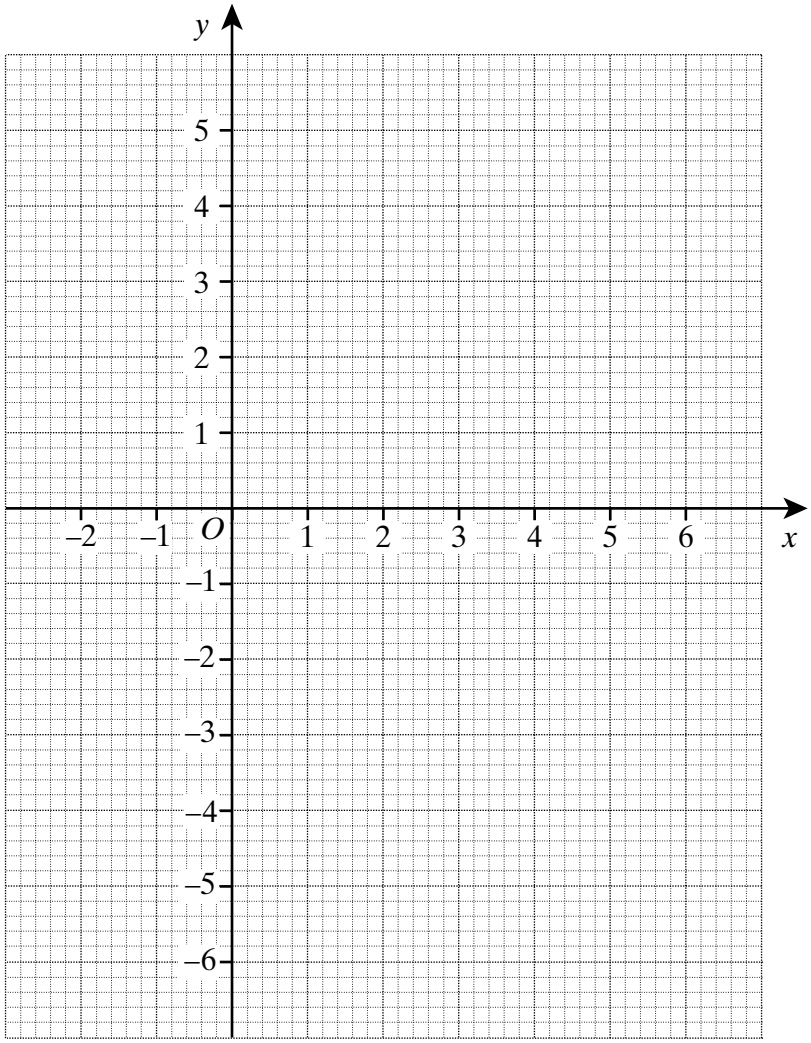

(2 marks)

(c) Use your graph to solve the equation $x^2 - 4x - 1 = 0$.

Answer ..... and ..... *(2 marks)*

LEAVE MARGIN BLANK

15 The diagram shows a triangle, ABC.

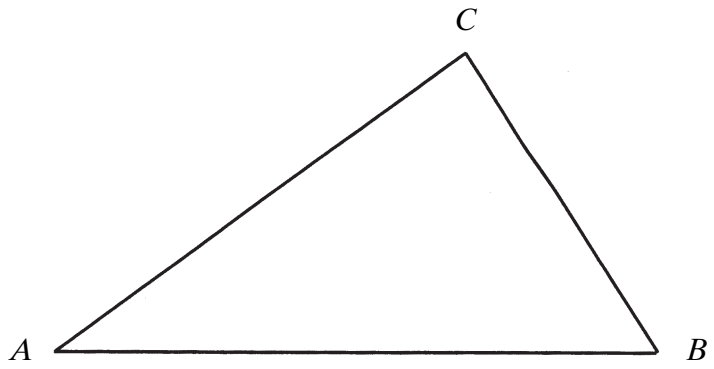

(a) Using a ruler and compasses only, construct the perpendicular bisector of AB.
You **must** show clearly all your construction arcs.

(2 marks)

(b) (i) Repeat this construction on another side of the triangle. *(1 mark)*

(ii) The point of intersection of the two bisectors is the centre of the circle which passes through A, B and C.

Draw this circle. *(2 marks)*

11

Turn over ▶

LEAVE MARGIN BLANK

16 The diagram shows the points $A(0,3)$ and $B(3,15)$.

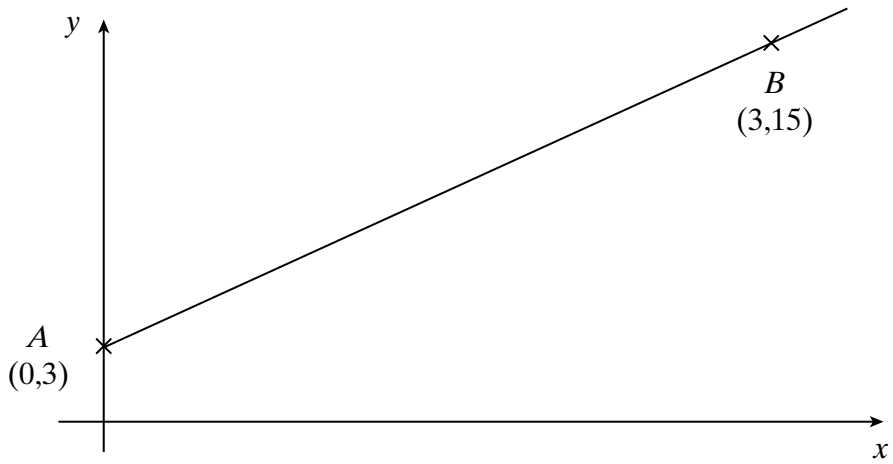

Find the equation of the line AB.

.....

.....

.....

.....

Answer ..... *(3 marks)*

17 Make x the subject of $x^2 + k = 16$

.....

.....

.....

Answer $x =$ ..... *(2 marks)*

LEAVE MARGIN BLANK

18 (a) In the diagram, O is the centre of the circle.

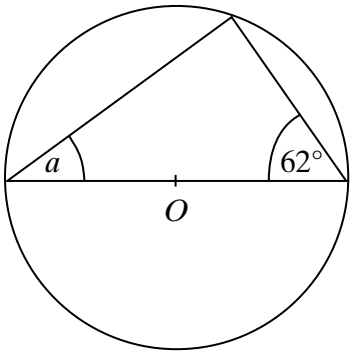

Not drawn accurately

Calculate the value of a.

.....

.....

Answer ..... degrees *(2 marks)*

(b)

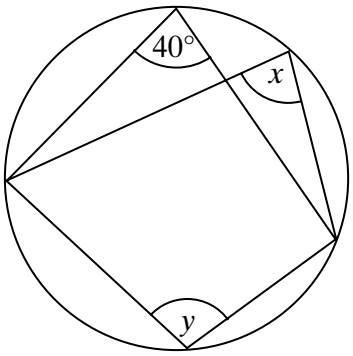

Not drawn accurately

(i) Write down the value of x.

Answer ..... degrees *(1 mark)*

(ii) Calculate the value of y.

.....

.....

Answer ..... degrees *(1 mark)*

9

Turn over ▶

LEAVE MARGIN BLANK

19 Solve the simultaneous equations

$$2x + 3y = 9$$
$$3x + 2y = 1$$

You **must** show your working.
Do **not** use trial and improvement.

.....

.....

.....

.....

.....

.....

.....

.....

Answer $x =$ ..... , $y =$ ..... *(4 marks)*

END OF QUESTIONS

4